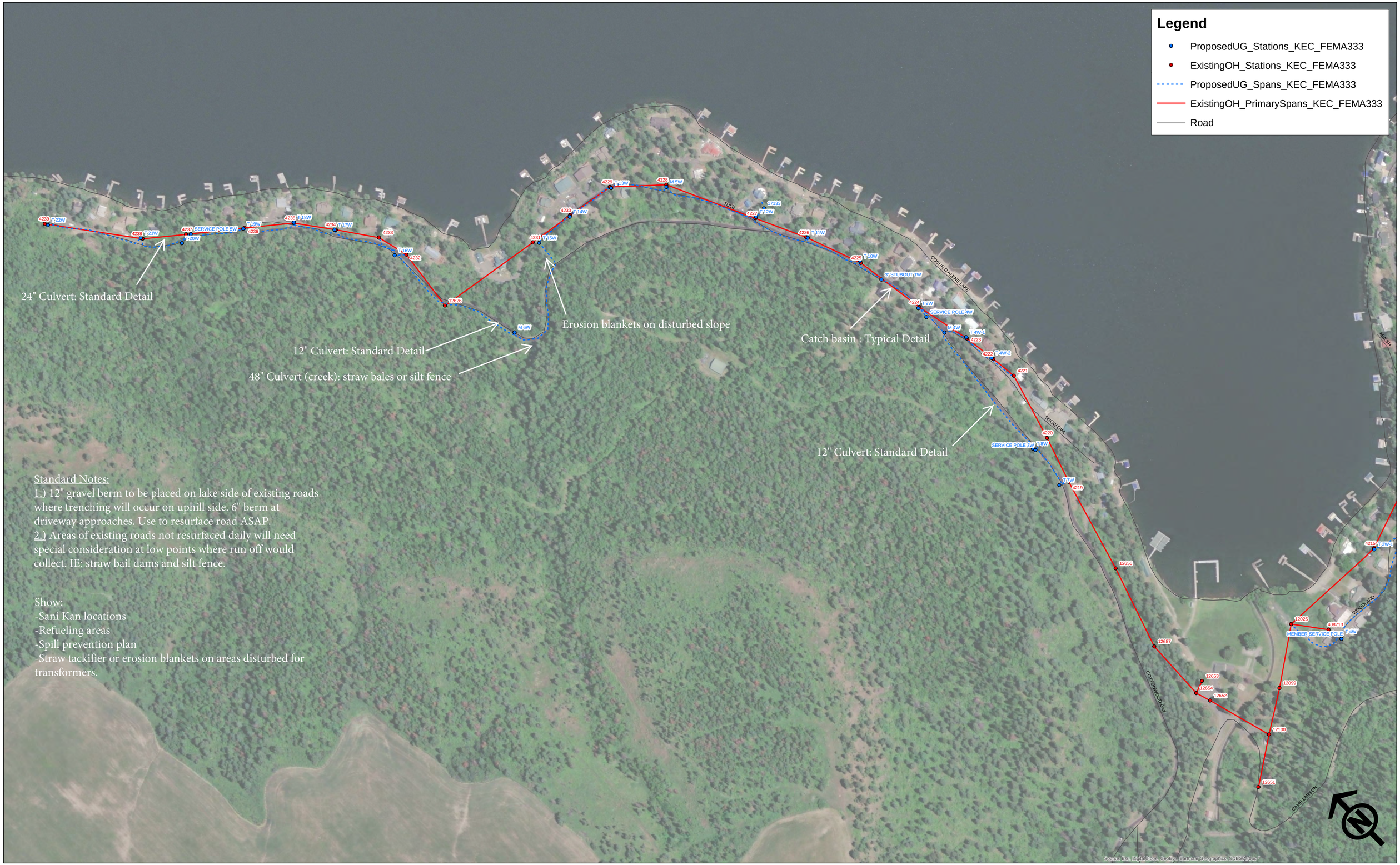
Legend
ProposedUG_Stations_KEC_FEMA333
ExistingOH_Stations_KEC_FEMA333
ProposedUG_Spans_KEC_FEMA333
ExistingOH_PrimarySpans_KEC_FEMA333
Road
24" Culvert: Standard Detail
12" Culvert: Standard Detail
48" Culvert (creek): straw bales or silt fence
Erosion blankets on disturbed slope
Catch basin : Typical Detail
12" Culvert: Standard Detail
Standard Notes:
1.) 12" gravel berm to be placed on lake side of existing roads where trenching will occur on uphill side. 6" berm at driveway approaches. Use to resurface road ASAP.
2.) Areas of existing roads not resurfaced daily will need special consideration at low points where run off would collect. IE: straw bail dams and silt fence.
Show:
-Sani Kan locations
-Refueling areas
-Spill prevention plan
-Straw tackifier or erosion blankets on areas disturbed for transformers.
COEUR D ALENE LAKE
TULE
SNOW OWL
MARSH
WOODLAND
COTTONWOOD BAY
CAMP LARSON
SERVICE POLE 5W
SERVICE POLE 4W
SERVICE POLE 3W
MEMBER SERVICE POLE
7" STUBOUT 1W
Source: Esri, DigitalGlobe, GeoEye, Earthstar Geographics, CNES/Airbus D

Legend
ProposedUG_Stations_KEC_FEMA333
ExistingOH_Stations_KEC_FEMA333
ProposedUG_Spans_KEC_FEMA333
ExistingOH_PrimarySpans_KEC_FEMA333
Road
12" Culverts: Standard Details
Back up gravel berms with straw bale dams or silt fence as needed in steep areas
Straw wattles at end of driveways
Straw bale dams or silt fence
SERVICE POLE 4W
SERVICE POLE 3W
SERVICE POLE 2W
SERVICE POLE 1E
SERVICE POLE 3E
MEMBER SERVICE POLE
CLIFFDWELLERS
WOODLAND
NO NAME
MULSH
COEUR D'ALENE LAKE
COTTONWOOD BAY
COTTONWOOD
CAMP LARSON
SNOW OWL
N

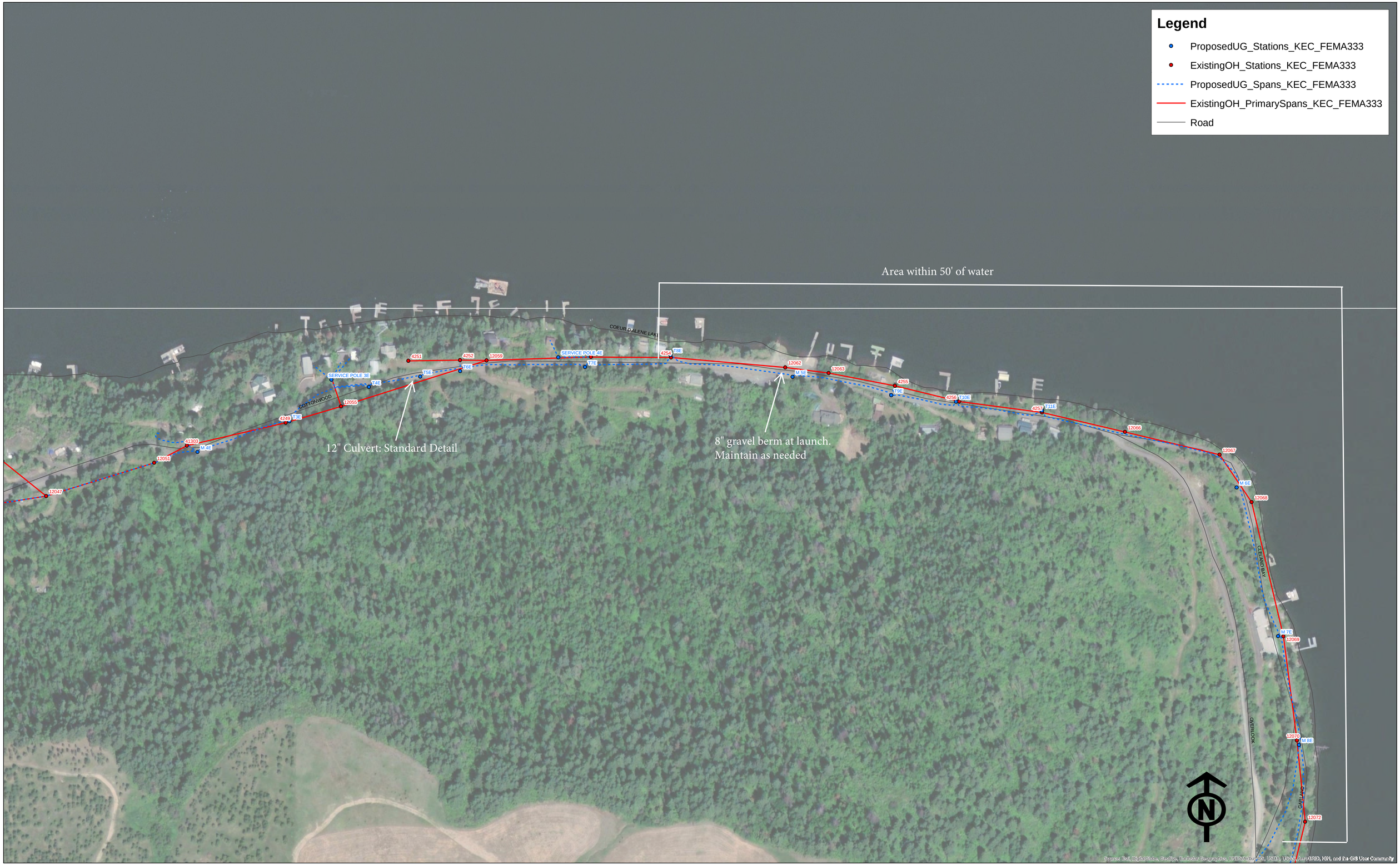
Legend
ProposedUG_Stations_KEC_FEMA333
ExistingOH_Stations_KEC_FEMA333
ProposedUG_Spans_KEC_FEMA333
ExistingOH_PrimarySpans_KEC_FEMA333
Road
Area within 50' of water
12" Culvert: Standard Detail
8" gravel berm at launch.
Maintain as needed
COEUR D'ALENE LAKE
COTTONWOOD
CLELAND BAY
OVERLOOK
GARLAND
SERVICE POLE 3E
SERVICE POLE 4E
T4E
T5E
T6E
T7E
T8E
T3E
T9E
T10E
T11E
M 4E
M 5E
M 6E
M 7E
M 8E
41303
12051
12047
12055
12059
4249
4251
4252
4254
12062
12063
4255
4256
4257
12066
12067
12068
12069
12070
12072
Source: Esri, DigitalGlobe, GeoEye, Earthstar Geographics, CNES/Airbus DS, USDA, USGS, AeroGRID, IGN, and the GIS User Community

Legend
ProposedUG_Stations_KEC_FEMA333
ExistingOH_Stations_KEC_FEMA333
ProposedUG_Spans_KEC_FEMA333
ExistingOH_PrimarySpans_KEC_FEMA333
Road
COVE POINT
LOWMEISTER BAY
CLELAND BAY
OVERLOOK
GARLAND
GLORY
HEMLOCK
COEUR D ALENE LAKE
COTTONWOOD
Area within 50' of water
3 catch basins: Typical Detail
12" Culvert: Standard Detail
12" Culvert: Standard Detail
48" Culvert: Protect with straw bale dams or silt fence
12004
T19E
2" STUBOUT 2E
2" STUBOUT 3E
SERVICE POLE 6B
T18E
4265
T17E
12003
M10E
4264
T16E
4263
T15E
2" STUBOUT 1E
4262
T14E
4261
T13E
12072
12070
M 8E
12069
M 7E
12068
M 6E
12067
12066
T11E
4257
4256
T10E
4255
4258
SERVICE POLE 5B
SPLICE BOX
T8E-1
40507
4260
T 8E-2
12071
EXISTING SERVICE POLE
EXISTING SERVICE POLE 2
T12E
M9E
Source: Esri

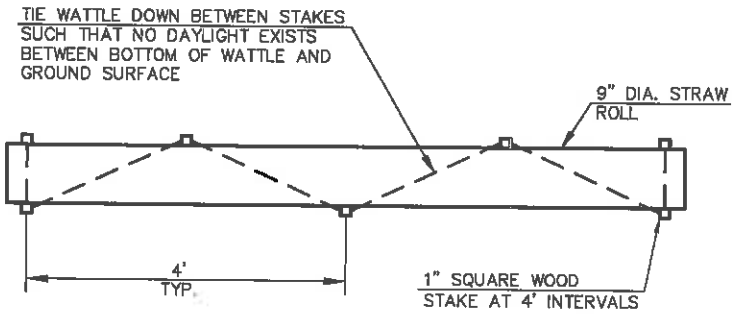

PLAN

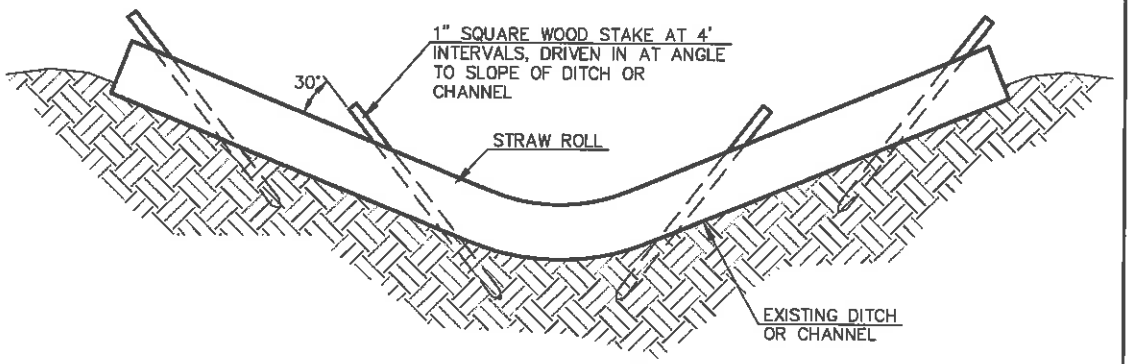

DITCH OR CHANNEL SECTION

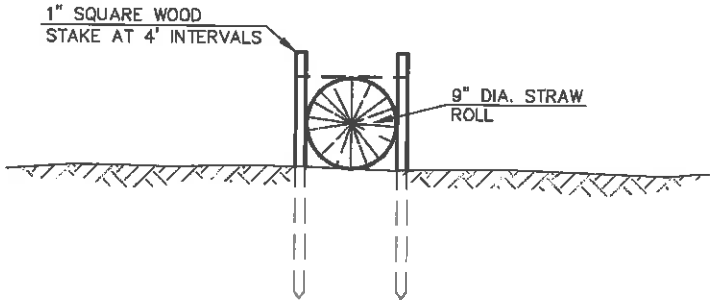

WATTLE SECTION

TO BE INSTALLED IN AREAS WHERE LAWN TURF OR NATIVE VEGETATION IS WELL ESTABLISHED

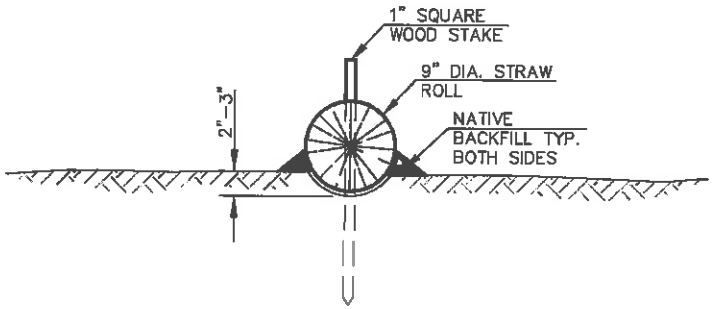

WATTLE SECTION

TO BE INSTALLED IN AREAS WITH DIRT, GRAVEL OR SURFACES OTHER THAN ESTABLISHED VEGETATION SURFACES

WATTLE INSTALLATION DETAIL

NO SCALE

WELCH-COMER ENGINEERS | SURVEYORS
www.welchcomer.com
350 E. Kathleen Ave.
Coeur d'Alene, ID 83815
208-664-9382
(toll free) 877-815-5672
(fax) 208-664-5946

COPYRIGHT 2018
Welch-Comer & Associates, Inc.
This document, and ideas and designs incorporated herein, as an instrument of professional service, is the property of Welch-Comer & Associates, Inc., and is not to be used in whole or in part for any other project without the written authorization of Welch-Comer & Associates, Inc.

KOOTENAI ELECTRIC
FEMA PROJECTS
BMP DETAILS
FIBER WATTLE

PROJECT NO.:	41345
DESIGNED BY:	A.M.W.
DRAWN BY:	J.A.L.
DWG NAME:	41345DT01.DWG
DATE:	11-27-18
SHEET NO:	DT1

N:\Civil3D Projects\41345\Production Drawings\41345DT01.dwg, 11/27/2018 3:20:31 PM, Julie, 1:1

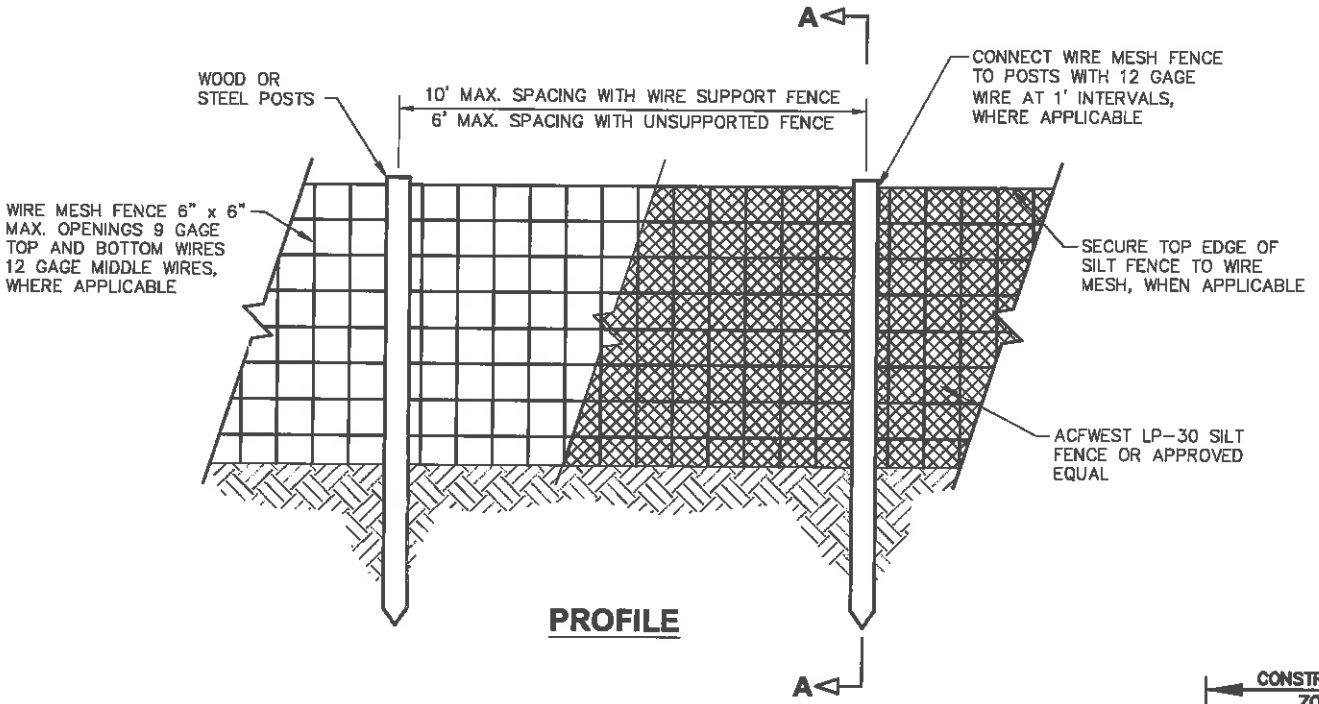

PROFILE

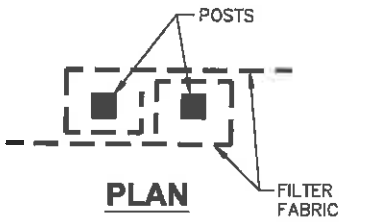

PLAN

BURRITO WRAP CONNECTION

NOTES:

1. FILTER FABRIC AND WIRE MESH SUPPORT SHALL BE ATTACHED TO UPSTREAM SIDE OF POSTS.
2. REMOVE SEDIMENT AS NEEDED. MAXIMUM STORAGE HEIGHT IS 9".
3. ATTACHED TWO ROLLS OF SILT FENCE WITH BURRITO WRAP CONNECTION AS SHOWN.
4. UNSUPPORTED AND SUPPORTED (WITH WIRE MESH) ARE BOTH ALLOWED SO LONG AS THE SUPPORT DISTANCE IS ADJUSTED APPROPRIATELY.

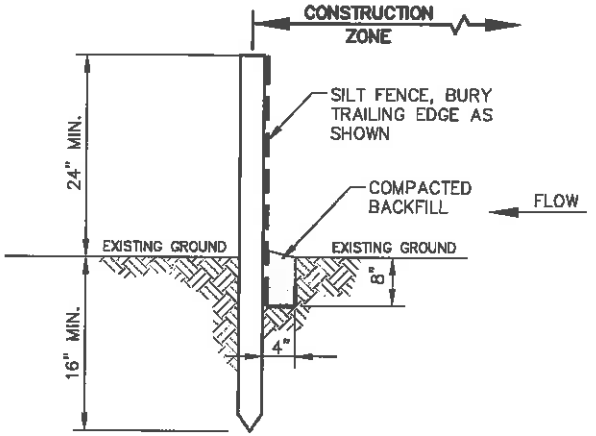

SECTION A-A

SILT FENCE DETAIL

NO SCALE

WELCH-COMER ENGINEERS | SURVEYORS
www.welchcomer.com
350 E. Kathleen Ave.
Coeur d'Alene, ID 83815
208-664-9382
(toll free) 877-815-5672
(fax) 208-664-5946

COPYRIGHT 2018
Welch-Comer & Associates, Inc.
This document, and ideas and designs incorporated herein, as an instrument of professional service, is the property of Welch-Comer & Associates, Inc., and is not to be used in whole or in part for any other project without the written authorization of Welch-Comer & Associates, Inc.

KOOTENAI ELECTRIC
FEMA PROJECTS
BMP DETAILS
SILT FENCE

PROJECT NO.:	41345
DESIGNED BY:	A.M.W.
DRAWN BY:	J.A.L.
DWG NAME:	41345DT01.DWG
DATE:	11-27-18
SHEET NO:	DT2

N:\Civil3D Projects\41345\Production Drawings\41345DT01.dwg, 11/27/2018 3:20:44 PM, Julie, 1:1

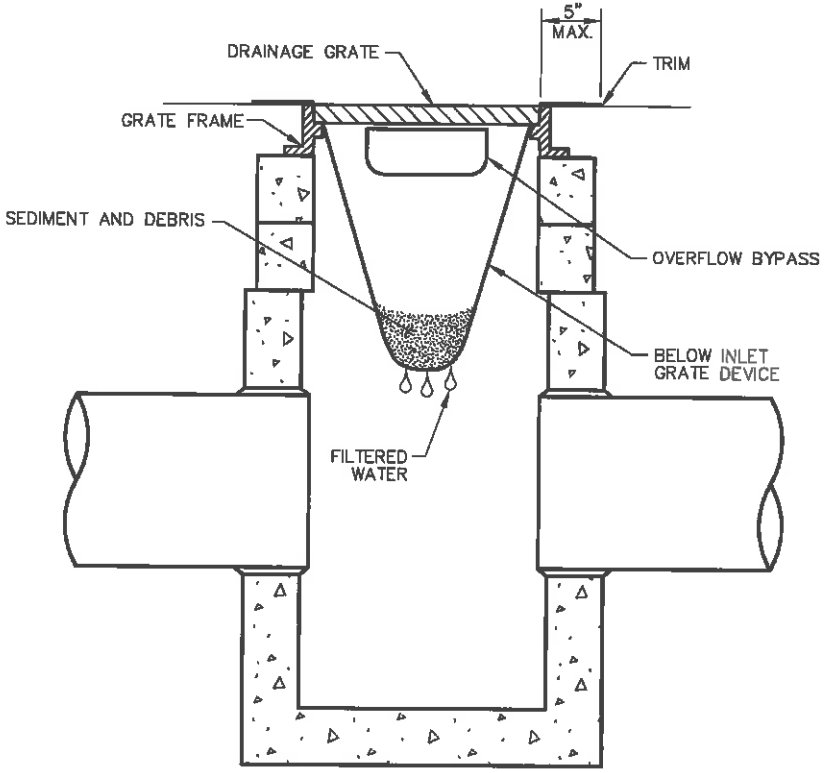

SECTION VIEW

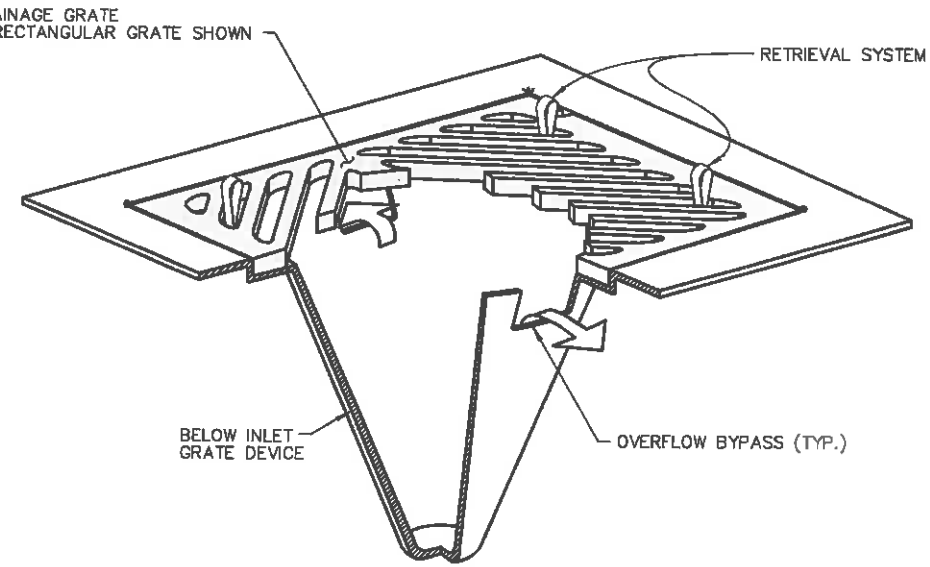

ISOMETRIC VIEW

NOTES:

1. SIZE THE BELOW INLET GRATE DEVICE (BIGD) FOR THE STORM WATER STRUCTURE IT WILL SERVICE.
2. THE BIGD SHALL HAVE A BUILT-IN HIGH-FLOW RELIEF SYSTEM (OVERFLOW BYPASS).
3. THE RETRIEVAL SYSTEM MUST ALLOW REMOVAL OF THE BIGD WITHOUT SPILLING THE COLLECTED MATERIAL.
4. PERFORM MAINTENANCE IN ACCORDANCE WITH STANDARD SPECIFICATION 8-01.3(15).

STORM DRAIN INLET PROTECTION DETAIL

NO SCALE

WELCH-COMER ENGINEERS | SURVEYORS
www.welchcomer.com
350 E. Kathleen Ave.
Coeur d'Alene, ID 83815
208-664-9382
(toll free) 877-815-5672
(fax) 208-664-5946

COPYRIGHT 2018
Welch-Comer & Associates, Inc.
This document, and ideas and designs incorporated herein, as an instrument of professional service, is the property of Welch-Comer & Associates, Inc., and is not to be used in whole or in part for any other project without the written authorization of Welch-Comer & Associates, Inc.

KOOTENAI ELECTRIC
FEMA PROJECTS
BMP DETAILS
STORM DRAIN INLET PROTECTION

PROJECT NO.:	41345
DESIGNED BY:	A.M.W.
DRAWN BY:	J.A.L.
DWG NAME:	41345DT01.DWG
DATE:	11-27-18
SHEET NO:	DT3

N:\Civil3D Projects\41345\Production Drawings\41345DT01.dwg, 11/27/2018 3:20:57 PM, Julie, 1:1

NOTES:

1. STRAW BALES SHALL BE USED TO PROTECT INLETS LOCATED WHERE STAKES CAN BE INSTALLED SUCH AS GRASSY OR DIRT SURFACES.

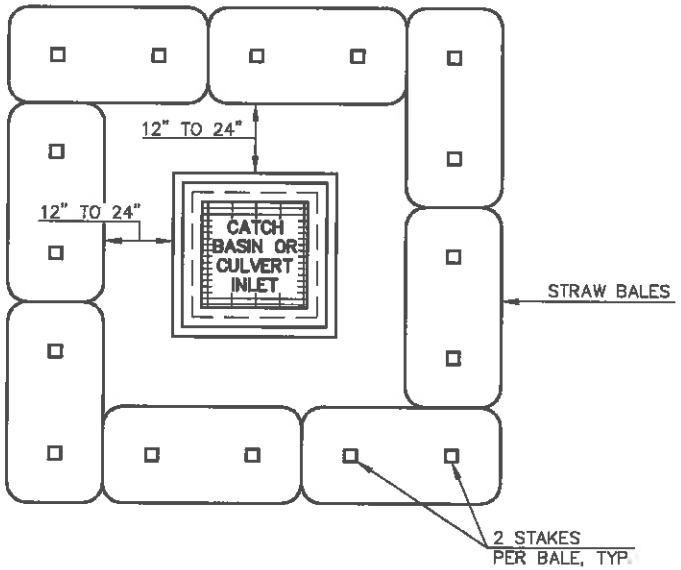

STRAW BALES
(FOR CATCH BASINS OR CULVERT INLETS)

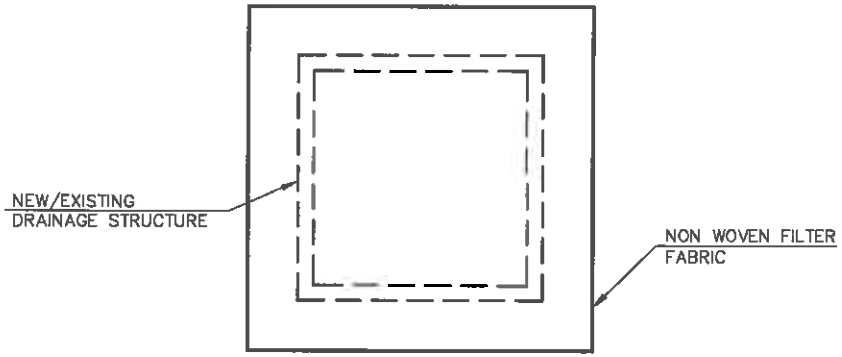

PLAN

NOTES:

1. TEMPORARY GRAVEL FILTER SHALL BE USED TO PROTECT INLETS LOCATED IN PAVEMENT OR ADJACENT TO THE WATERLINE TRENCH LIMITS.

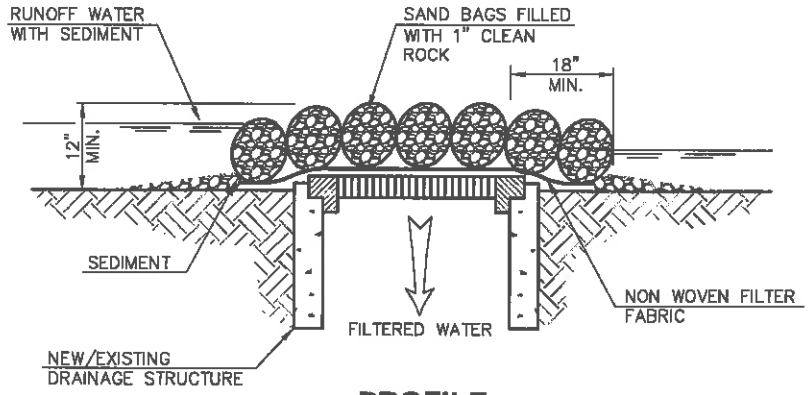

PROFILE

FILTER FABRIC
(FOR CATCH BASINS)

INLET PROTECTION DETAIL

NO SCALE

WELCH-COMER ENGINEERS | SURVEYORS

www.welchcomer.com
350 E. Kathleen Ave.
Coeur d'Alene, ID 83815

208-664-9382
(toll free) 877-815-5672
(fax) 208-664-5946

COPYRIGHT 2018
Welch-Comer & Associates, Inc.
This document, and ideas and designs incorporated herein, as an instrument of professional service, is the property of Welch-Comer & Associates, Inc., and is not to be used in whole or in part for any other project without the written authorization of Welch-Comer & Associates, Inc.

KOOTENAI ELECTRIC
FEMA PROJECTS
BMP DETAILS
INLET PROTECTION

PROJECT NO.:	41345
DESIGNED BY:	A.M.W.
DRAWN BY:	J.A.L.
DWG NAME:	41345DT01.DWG
DATE:	11-27-18
SHEET NO:	DT4

N:\Civil\3D Projects\41345\Production Drawings\41345DT01.dwg, 11/27/2018 3:21:10 PM, Julie, 1:1

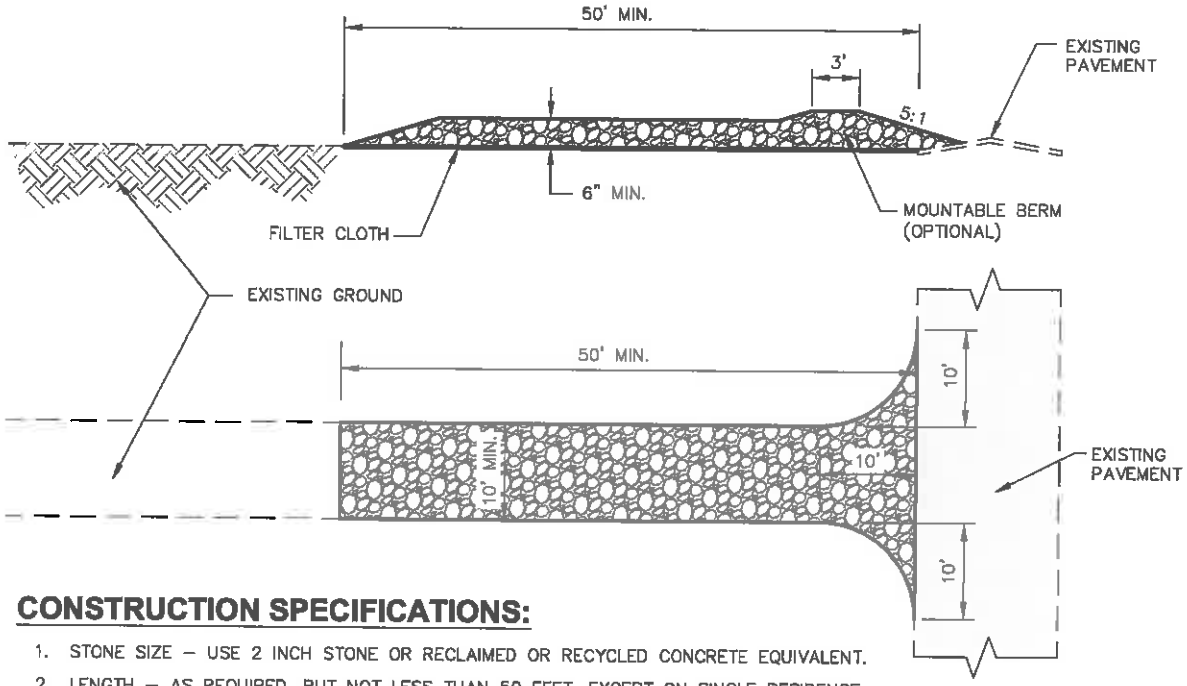

CONSTRUCTION SPECIFICATIONS:

1. STONE SIZE – USE 2 INCH STONE OR RECLAIMED OR RECYCLED CONCRETE EQUIVALENT.
2. LENGTH – AS REQUIRED, BUT NOT LESS THAN 50 FEET, EXCEPT ON SINGLE RESIDENCE LOT WHERE 30 FOOT MIN. LENGTH WOULD APPLY.
3. THICKNESS – NOT LESS THAN 6 INCHES.
4. WIDTH – 10 FOOT MIN., BUT NOT LESS THAN FULL WIDTH AT POINTS WHERE INGRESS OR EGRESS OCCURS.
5. FILTER CLOTH – WILL BE PLACED OVER THE ENTIRE AREA PRIOR TO PLACING OF STONE. FILTER WILL NOT BE REQUIRED ON A SINGLE FAMILY RESIDENCE LOT.
6. SURFACE WATER – ALL SURFACE WATER FLOWING OR DIVERTED TOWARD CONSTRUCTION ENTRANCES SHALL BE PIPED ACROSS THE ENTRANCE. IF PIPING IS IMPRACTICAL, A MOUNTABLE BERM WITH 5:1 SLOPES WILL BE PERMITTED.
7. MAINTENANCE – THE ENTRANCE SHALL BE MAINTAINED IN A CONDITION WHICH WILL PREVENT TRACKING OR FLOWING OF SEDIMENT ONTO PUBLIC RIGHT–OF–WAY. THIS MAY REQUIRE PERIODIC TOP DRESSING WITH ADDITIONAL STONE AS CONDITIONS DEMAND AND REPAIR AND/OR CLEANOUT OF ANY MEASURES USED TO TRAP SEDIMENT. ALL SEDIMENT SPILLED, DROPPED, WASHED OR TRACKED ONTO PUBLIC RIGHT–OF–WAY MUST BE REMOVED IMMEDIATELY.
8. WASHING – WHEELS SHALL BE CLEANED TO REMOVE SEDIMENT PRIOR TO ENTRANCE ONTO PUBLIC RIGHT–OF–WAY. WHEN WASHING IS REQUIRED, IT SHALL BE DONE ON AN AREA STABILIZED WITH STONE AND WHICH DRAINS INTO AN APPROVED SEDIMENT TRAPPING DEVICE.
9. PERIODIC INSPECTION AND NEEDED MAINTENANCE SHALL BE PROVIDED AFTER EACH RAIN.

STABILIZED CONSTRUCTION ENTRANCE DETAIL

NO SCALE

WELCH-COMER ENGINEERS | SURVEYORS
www.welchcomer.com
350 E. Kathleen Ave.
Coeur d'Alene, ID 83815
208–664–9382
(toll free) 877–815–5672
(fax) 208–664–5946

COPYRIGHT 2018
Welch–Comer & Associates, Inc.
This document, and ideas and designs incorporated herein, as an instrument of professional service, is the property of Welch–Comer & Associates, Inc., and is not to be used in whole or in part for any other project without the written authorization of Welch–Comer & Associates, Inc.

KOOTENAI ELECTRIC
FEMA PROJECTS
BMP DETAILS
STABILIZED CONSTRUCTION ENTRANCE

PROJECT NO.:	41345
DESIGNED BY:	A.M.W.
DRAWN BY:	J.A.L.
DWG NAME:	41345DT01.DWG
DATE:	11–27–18
SHEET NO:	DT5

N:\Civil3D Projects\41345\Production Drawings\41345DT01.dwg, 11/27/2018 3:21:25 PM, Julie, 1:1

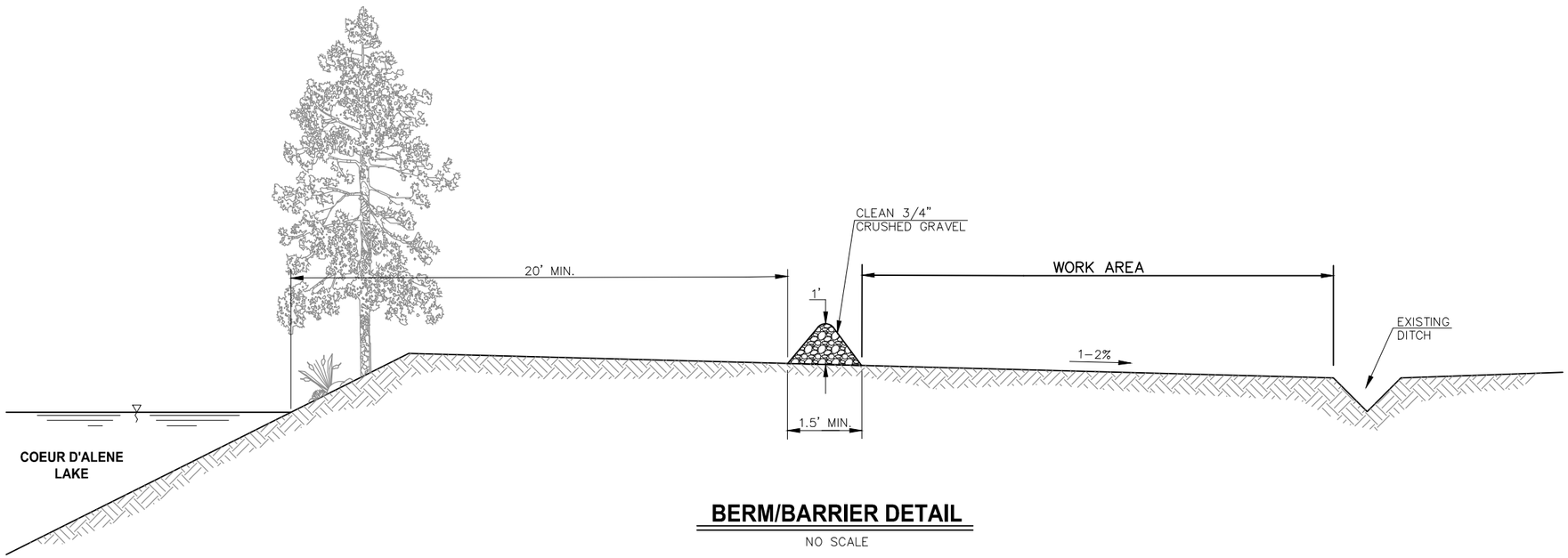

BERM/BARRIER DETAIL

NO SCALE

COPYRIGHT 2019
Welch~Comer & Associates, Inc.
This document, and ideas and designs incorporated herein, as an instrument of professional service, is the property of Welch~Comer & Associates, Inc., and is not to be used in whole or in part for any other project without the written authorization of Welch~Comer & Associates, Inc.

PROFESSIONAL ENGINEER
LICENSED
16259
STATE OF IDAHO
ASHLEY M WILLIAMS

01/22/19

WELCH~COMER
ENGINEERS | SURVEYORS
www.welchcomer.com
350 E. Kathleen Ave.
Coeur d'Alene, ID 83815
208-664-9382
(toll free) 877-815-5672
(fax) 208-664-5946

NO.	DATE	REVISION DESCRIPTION	BY

KOOTENAI ELECTRIC FEMA PROJECT

COTTONWOOD BAY
SWPPP

DETAILS

PROJ NO:	41345
DESIGNED BY:	A.M.W.
DRAWN BY:	J.A.L.
CHECKED BY:	A.M.W.
DWG NAME:	41345DT02.DWG
DATE:	01-22-19
SHEET NO:	